Brief Specification of Intel X7425E based Industrial Automation PC

Copyright © 2024 INVENDIS Technologies

Brief Specification of Intel X7425E based Industrial Automation PC

HARDWARE SPECIFICATION	
CPU	Intel X7425E, 4 cores with 3.4GHz Turbo Frequency.
RAM	64GB DDR5 SODIMM (Max) (Memory to be Separately Ordered)
Ethernet Ports	Four 10/100/1000 Ports ((Realtek RTL8111H)
Cellular	One M.2(B Key, supports both types 3042 and 3052) with USB2.0 and USB3.0 Supporting both 4G and 5G Modems. (Cellular module to be Separately Ordered), One M.2 slot with dual SIM optional
SIM	2x Nano SIM (additional 2 X nano SIM optional)
Wi-Fi	One M.2 (E Key, 3052 for Wifi/BLE Module 802.11b/g/n/ac/ax (1 x PCIe, 1 X USB2.0) (WiFi module to be Separately Ordered)
Storage	One M.2 (B Key,2280), Upto 512GB SSD, Upto 64GB eMMC ((Memory to be Separately Ordered)
TPM	Firmware/Hardware TPM (Optional)
RTC Battery Backup	3V, CR2032
Input Power	12V DC , DC Jack
Button	Software Reset
LEDs	Power, SATA, WiFi (depending on WiFi module), Cellular Activity (depending on modem),Link and Activity for Ethernets
Antenna	Cellular: 4 x SMA Connector, Wi-Fi: 1x SMA connector for 5Ghz and 1 x SMA connector for 2.4 Ghz
USB	4 x USB2.0
RS232	2 X Isolated RS232
RS485	2 X Isolated RS485
Digital Inputs/Outputs	4 X Isolated DIOs (Configurable as Input or Output)
HDMI	1 (Optional)
Console	1 x Type B Micro USB
Enclosure	Aluminum Enclosure
Mounting	Desktop Mount, Rack Mount, Vesa Mount, Wall Mount
Design	Fan less
Dimensions	150mm X 250mm X 55mm (L X W X H)
Operational & Environmental	
Storage Temperature	-20 ~ 75℃
Operating Temperature	0 ~ 50℃
Humidity	10 ~ 90% (non-condensing)
Operating System	
Operating System Boot Loader	Ubuntu/Oracle Linux/OpenWRT/Windows Intel Slim Boot Loader

Copyright © 2024 INVENDIS Technologies

Brief Specification of Intel X7425E based Industrial Automation PC

Block Diagram:

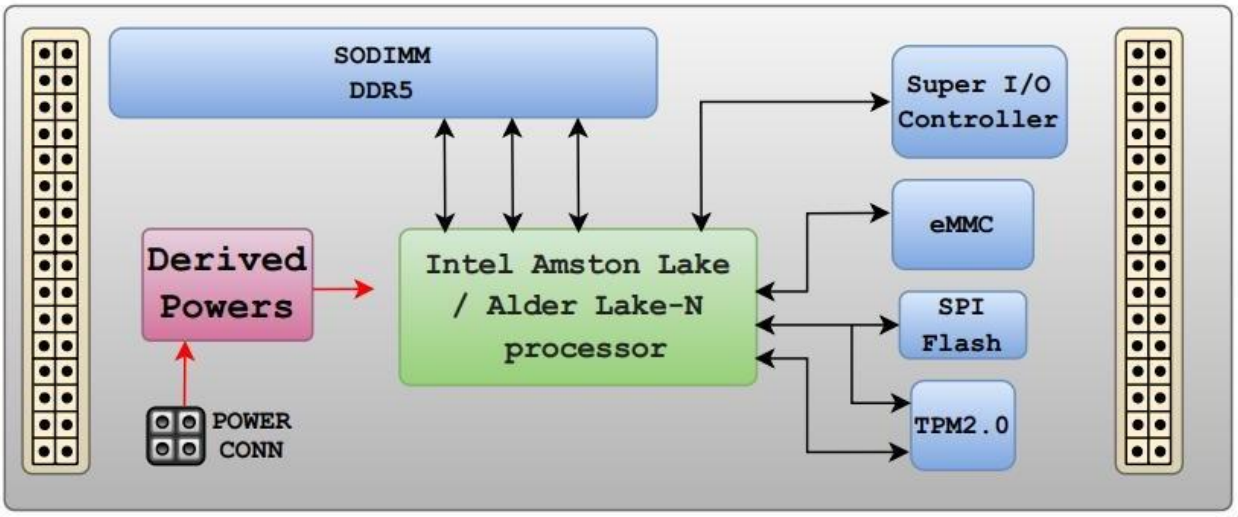

INTEL ADL / AML carrier board-3 (INV-CE)

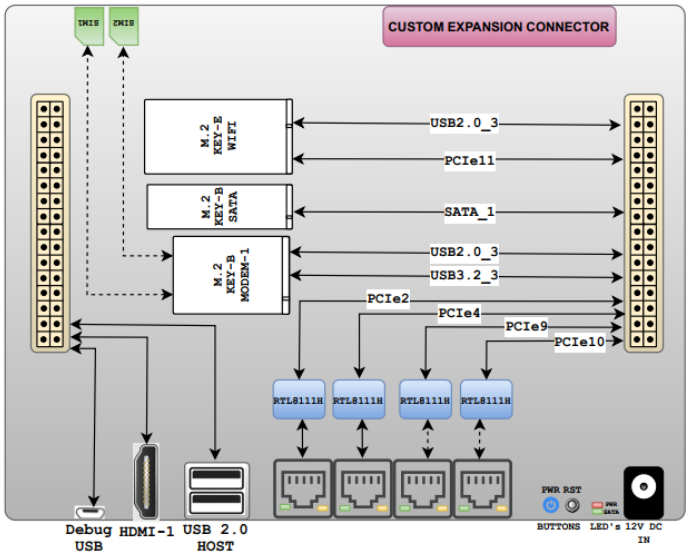

Copyright © 2024 INVENDIS Technologies

Brief Specification of Intel X7425E based Industrial Automation PC

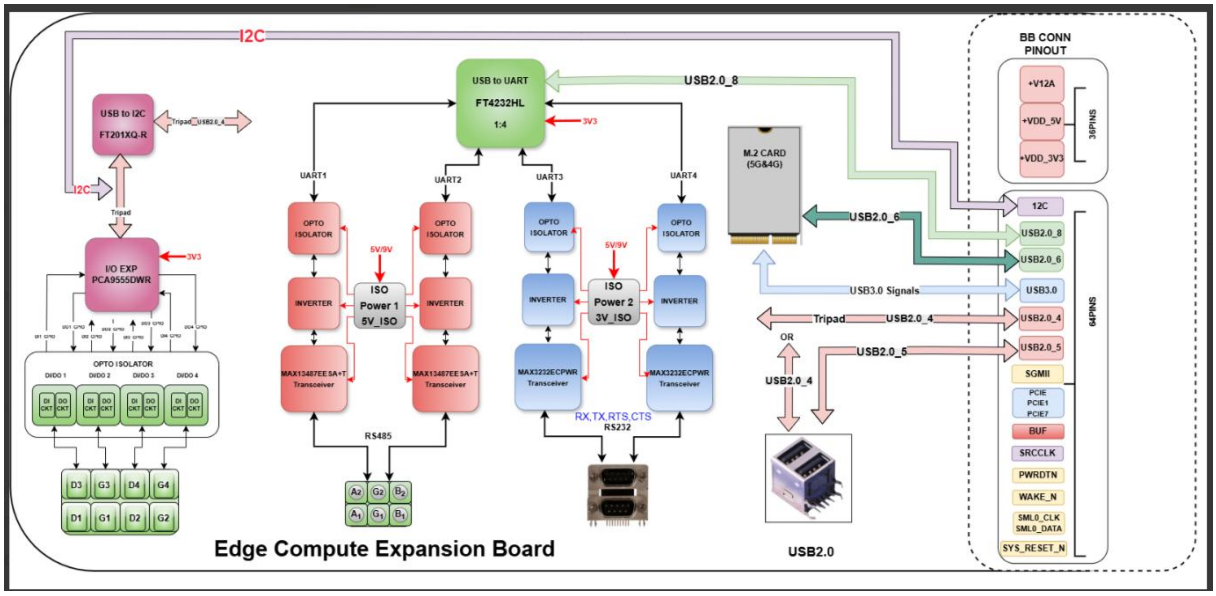

Copyright © 2024 INVENDIS Technologies